RF PECK

Commercial HVAC Equipment

2022 Stock Catalog

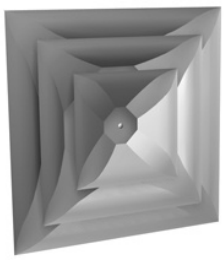

Sales Offices

ALBANY, NEW YORK
22 Computer Dr West
Albany, NY 12205
Tel (518) 869-3541
Fax (518) 869-5718

BUFFALO, NEW YORK
132 Cayuga Road
Buffalo, NY 14225
Tel (716) 276-8933

ROCHESTER, NEW YORK
889 Atlantic Avenue
Rochester, NY 14609
Tel (585) 697-0836

SYRACUSE, NEW YORK
6412 Baird Avenue
Syracuse, NY 13206
Tel (315) 471-0105
Fax (315) 471-2045

Warehouse Locations: Rochester & Syracuse

IMMEDIATE SHIPPING OR PICKUP AVAILABLE • VISA MasterCard AMERICAN EXPRESS • www.rfpeck.com

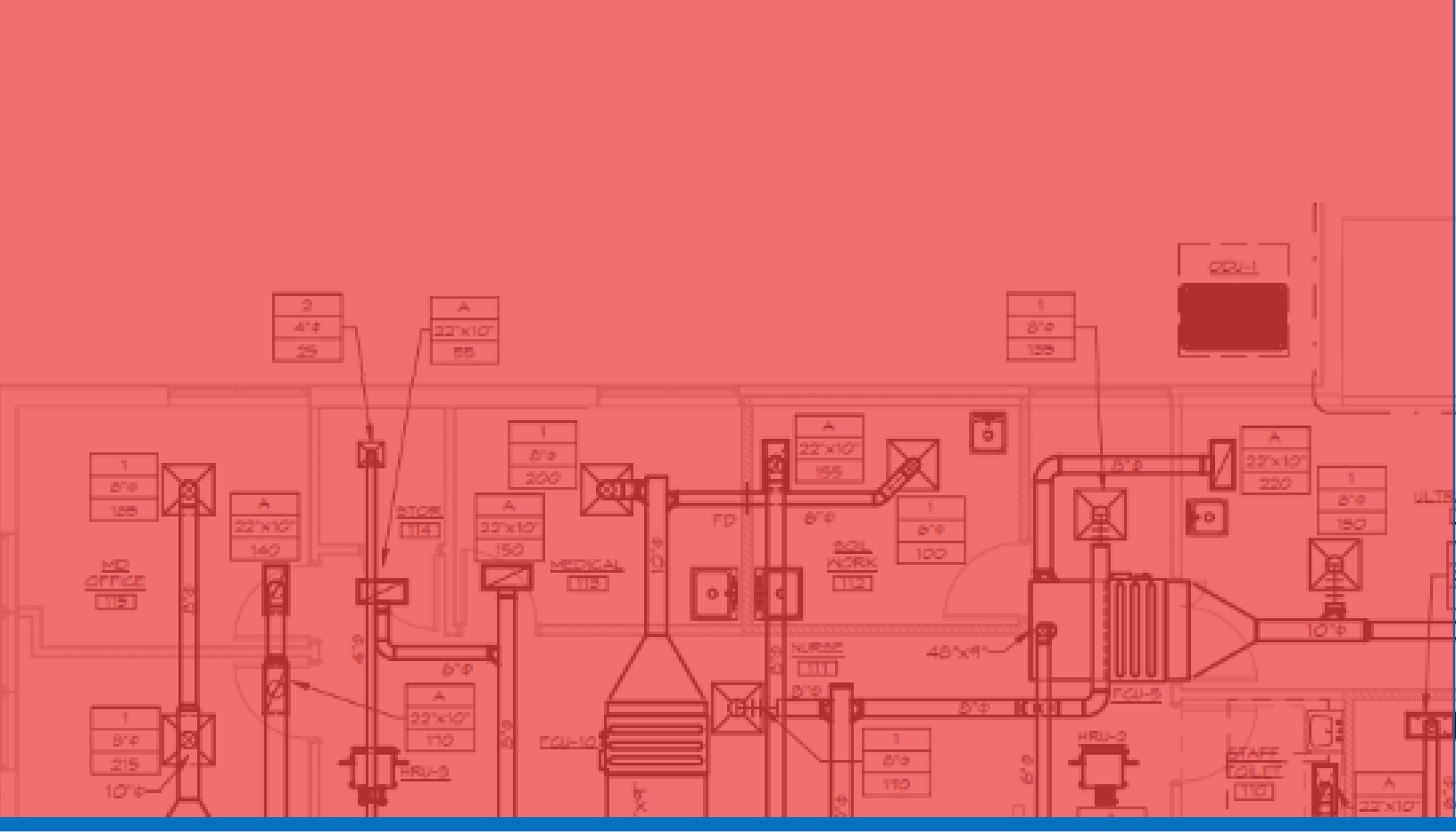

For all equipment use:

.65 Multiplier

plus freight*

*If not directly picked up from the warehouse

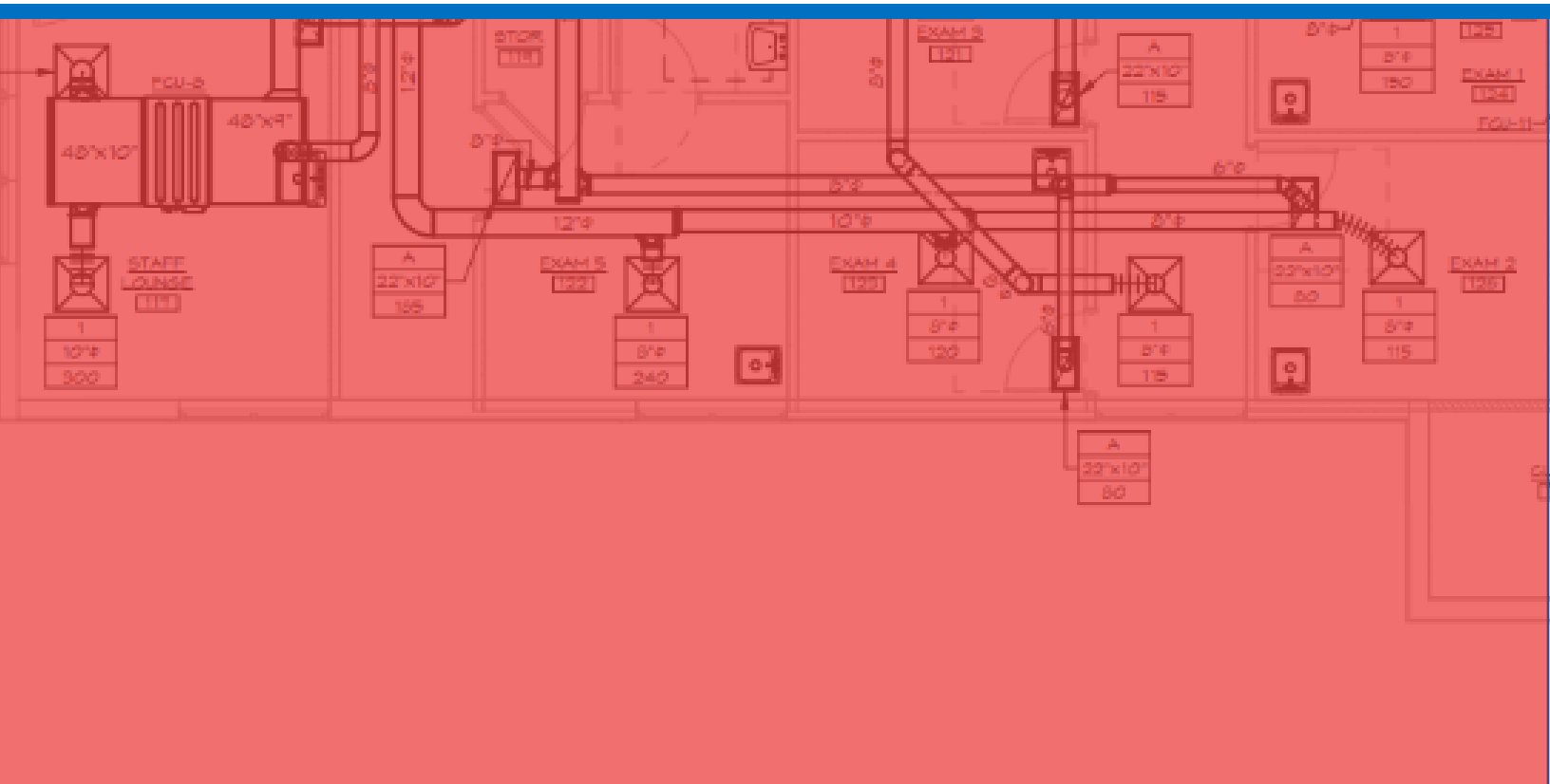

Table of Contents

Items	Page
Access Doors	12
Brick Vents	12
Ceiling Fan	8
Dampers	11
Diffusers	2
Equipment Rails	9
Fan Accessories	9
Grilles	3
Louvers	12
Pipe Portals	9
RG&D Accessories	4
Roof Caps	10
Roof Fans	6
Variable Frequency Drives	15
Vibration Hangers/Isolators	13,14
Wall Caps	10

TERMS & CONDITIONS

Prices: **Prices are F.O.B Albany, Syracuse & Rochester, New York. Prices are subject to change without notice.**

Terms: **All orders are to be paid with either cash, bank approved check, or credit card unless prior credit has been approved. Credit terms to be Net thirty (30) days from date of invoice. A service charge of 1 ½% per month will be charged after thirty (30) days until payment is received. Also reasonable attorneys' fees in the amount of fifteen percent (15%) of outstanding balance shall be assessed in the event it becomes necessary to collect and indebtedness hereunder by or through any attorney-at-law.**

Taxes: **No taxes are included in the sale price.**

Warranty: **R.F. Peck Co., Inc. makes no express warranties as to the goods sold but extends to the buyer the manufacturer's warranty which is available upon request.**

Returns: **No products shall be returned unless *approved in writing* and will be subject to transportation, handling charges and restocking charges.**

Consequential: **R.F. Peck Co., Inc. shall not be liable for any consequential, incidental or contingent Damages whatsoever.**

Supply Diffusers

RNS3

Features:

- Material: Steel
- 3 Concentric Cones
- Appliance White Finish

T-Bar Lay-in			
Panel	Neck Size	CFM Range	List Price
23 ¾ x 23 ¾	6	100-200	$58.00
	8	200-360	$58.00
	10	360-550	$58.00
	12	550-780	$58.00

UNI2

Features:

- Material: Steel
- Easily Removable Plaque Face
- Appliance White Finish

T-Bar Lay-in			
Panel	Neck Size	CFM Range	List Price
23 ¾ x 23 ¾	6	100-200	$65.00
	8	200-360	$65.00
	10	360-550	$65.00
	12	550-780	$65.00

Return Diffusers

4360

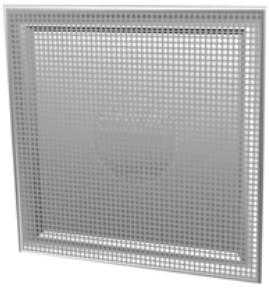

Features:

- Material: Steel
- Hinged Removable Perforated Face with Round Neck
- White Finish

T-Bar Lay-in			
Panel	Neck Size	CFM Range	List Price
23 ¾ x 23 ¾	6	175	$54.00
	8	250	$54.00
	10	350	$54.00
	12	400	$54.00
	22 X 22	3000	$47.00

Return Grilles

6145H

Features:

- Material: Steel
- Fixed Louvers
- White Finish

T-Bar Lay-in		
Neck Size	CFM Range	List Price
22 x 10	250-700	$47.00
22 x 22	1000-1400	$83.00

PLASTIC

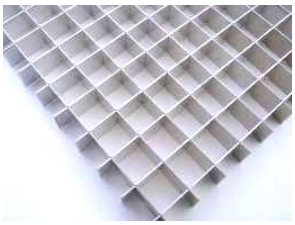

Features:

- Material: Plastic
- Egg Crate Face
- White Finish
- *Available in the Syracuse Warehouse

T-Bar Lay-in	
Neck Size	List Price
24 x 24*	$28.00
48 x 24*	$40.00

RG&D Accessories

SQ/RD

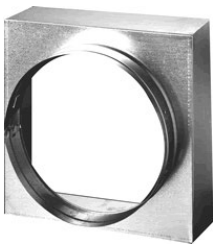

Features:

- Material: Steel
- Fit over diffuser neck
- 3” high square with 3” high collar
- Round neck sizes 1/8” under
- *Available in the Syracuse Warehouse

Square Dimension	Round Size	List Price
6 x 6	6*	$19.00
8 x 8	6*	$20.00
	8*	$20.00
10 x 10	8*	$21.00
	10*	$21.00
12 x 12	6	$22.00
	8	$22.00
	10*	$22.00
	12*	$2200
18 x 18	16*	$28.00
22 x 10	6	$26.00
	8	$26.00
	10	$26.00
22 x 22	6	$34.00
	8	$34.00
	10	$34.00
	12	$34.00
	14*	$34.00
	16*	$34.00
	18*	$34.00

DFA

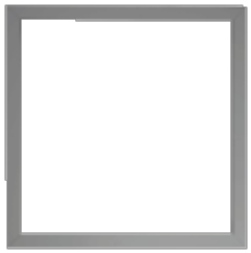

Features:

- Material: Aluminum
- For drwall ceilings
- White finish

Size	List Price
24 x 24	$46.00

Fan Engineering Information

Recommended Rates of Air Change Per Building Type

	Minute Per Air Change
GENERAL	
Corridors	60-20
Kitchens	1-3
Living Rooms	2-4
Meeting Rooms	4-10
Office	2-8
Residences	2-5
Toilet: Private	1-3
Public	2-5
RECREATIONAL	
Bars	2-4
Bowling Alley	2-8
Gymnasium	2-10
Recreational Room	2-8
Theaters	3-8

	Minute Per Air Change
HOSPITALS	
Disinfecting Room	2-5
Consulting Room	2-8
Office Room	3-10
Operating Room	1-4
Respiratory	2-6
Patients	5-10
Waiting Room	4-8
INSTITUTIONAL	
Assembly Hall	3-10
Auditoriums	4-15
Banks	3-10
Churches	4-15
Library	5-12

	Minute Per Air Change
HOTEL	
Dance Hall	3-8
Gallery	6-12
Washing Room	1-4
MACHINE ROOMS	
Boiler Room	2-4
Compressor Room	2-4
Engine Room	1-2
Generating Room	2-5
Transformer	1-5
Turbine Room	2-6
FOOD STORES	
Banquet Hall	3-6
Kitchens	1-3
Restaurants	5-10
Tempura House	1-3

	Minute Per Air Change
PLANTS/FACTORIES	
General Plant	
Bakeries	1-3
Dry Cleaners	1-5
Foundries	1-4
Glass Plants	1-2
Machine Shop	3-5
Mills (Paper)	2-3
Mills (Textiles)	5-15
Shop (General Vent)	3-10
Spinning Factory	4-12
Warehouse	2-10

Methods of Calculating Air Volume

RATE OF AIR CHANGE METHOD:

Step 1. Find total cubic feet of air space within the building or room to be ventilated.

Step 2. Determine number of air changes required. Generally mandated by local health codes or use above Air Change Table Guide.

Step 3. CFM required = $\dfrac{\text{Building/Room volume in cubic feet}}{\text{Minute/Air Change}}$

EXAMPLE:
Paper mill is 30 ft. x 50 ft. with 10 ft. high ceiling.
2-3 minutes per air change required for good ventilation.
30 ft. x 50 ft. x 10 ft. = 15,000 cubic ft. to be moved every 2 minutes or 7,500 CFM.

Fan Laws

The fan laws are a series of formulas used to predict the performance of a fan at parameters other than those listed in the multiratings catalog tables.

FAN LAW # 1: Effect of varying the fan speed, with the fan size and density remaining constant:

a. CFM varies as the RPM : $\dfrac{CFM_2}{CFM_1} = \dfrac{RPM_2}{RPM_1}$

b. SP varies as the RPM^2 : $\dfrac{SP_2}{SP_1} = \left[\dfrac{RPM_2}{RPM_1}\right]^2$

c. BHP varies as the RPM^3 : $\dfrac{BHP_2}{BHP_1} = \left[\dfrac{RPM_2}{RPM_1}\right]^3$

Fan Law # 2: Effect of changed density, with the fan size and speed remaining constant:

a. The CFM does not change : $CFM_2 = CFM_1$

b. The SP varies as the density : $\dfrac{SP_2}{SP_1} = \dfrac{d_2}{d_1}$

c. The BHP varies as the density : $\dfrac{BHP_2}{BHP_1} = \dfrac{d_2}{d_1}$

Subscript 1 is the catalog rating of selected fan
Subscript 2 is the desired rating

Roof Fans

ACE Spun Aluminum Downblast Roof Exhaust Fan

Features:

- Direct Drive
- Gravity Backdraft Damper included
- Speed Controller Pricing on page 9
- Roof curb dimensions on page 9

Fan Model	HP	RPM	Tip Speed	CFM	Sones	CFM	Sones	CFM	Sones	CFM	Sones	CFM	Sones	Speed Control	List Price	w/ curb
70C15DL	1/20	1700	3112	171	5.35	131	5.0	113	4.8	91	4.7	-	-	5 amp	$780.00	$970.00
70C15DM	1/20	1670	3057	242	5.9	187	5.6	157	5.2	102	4.6	-	-	5 amp	$820.00	$1,010.00
70C15DH	1/20	1550	2837	305	5.2	249	5.2	194	5.1	135	5.0	-	-	5 amp	$820.00	$1,010.00
90C15DL	1/8	1715	4047	489	8.7	445	8.4	410	8.1	372	7.8	331	7.3	5 amp	$880.00	$1,070.00
90C15DM	1/8	1670	3841	658	9.5	600	9.0	564	8.5	469	8.5	412	7.9	5 amp	$890.00	$1,080.00
90C15DH	1/8	1550	3658	865	9.1	759	9.1	650	8.9	509	8.4	411	8.0	5 amp	$890.00	$1,080.00
100C15DL	1/8	1665	4362	583	11.3	545	11.1	505	10.9	467	10.6	427	10.3	5 amp	$900.00	$1,090.00
100C15DH	1/8	1550	4061	967	11.0	856	11.0	766	10.8	667	10.7	552	10.5	5 amp	$900.00	$1,090.00
120C13D	1/4	1300	4084	1393	9.6	1316	9.6	1236	9.5	1152	9.2	1070	8.9	5 amp	$1,200.00	$1,410.00
135C13D	1/2	1300	4595	1983	12.2	1897	12.2	1808	12.2	1715	12.0	1622	11.7	10 amp	$1,250.00	$1,460.00
150C13D	3/4	1300	5105	2720	15.3	2624	15.3	2527	15.3	2427	15.1	2322	14.9	10 amp	$1,600.00	$1,850.00

Fan Dimension Information

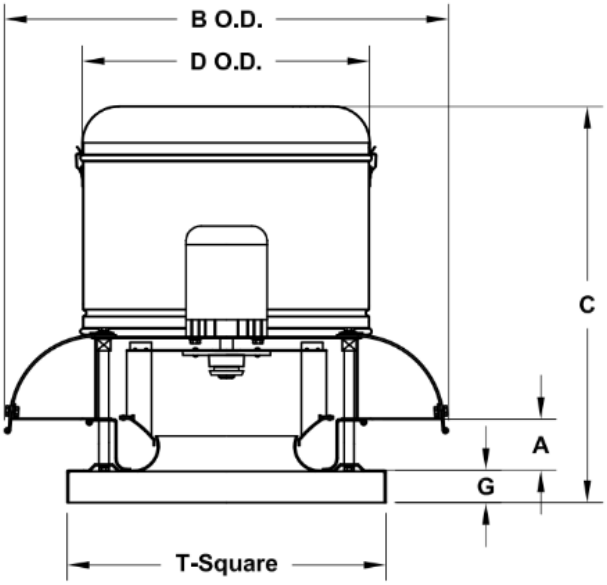

ACE-D Direct Drive Dimension Data				D	G	T Sq.	Roof Opening Square	Shipping Weight
70	1-3/4	13-5/8	13-13/16	16-3/4	2	18	13-1/2	20
90	2-1/2	18-3/4	16-13/16	16-3/4	2	18	13-1/2	28
100	2-1/2	18-3/4	16-13/16	16-3/4	2	18	13-1/2	30
120	1-7/16	28-7/16	26-9/16	20-3/8	2	20	15-1/2	67
135	1-15/16	28-7/16	27-1/16	20-3/8	2	20	15-1/2	72
150	2-13/16	32-7/8	29-3/16	23-13/16	2	24	19-1/2	90

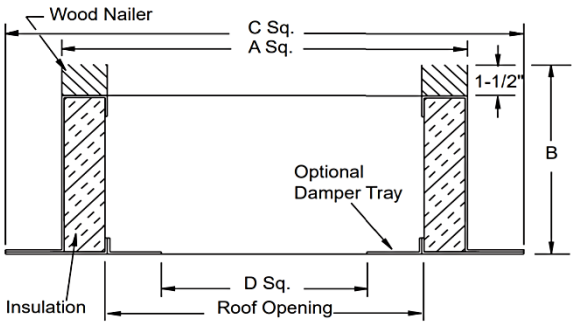

Roof Curb Dimension Data				D Sq	Roof Opening Square	Curb Size to Order
70-100	16-1/2	9-1/2	20-1/2	9-3/4	13-1/2	17 x 17
120-135	18-1/2	9-1/2	22-1/2	11-3/4	15-1/2	19 x 19
150	22-1/2	9-1/2	26-1/2	15-3/4	19-1/2	23 x 23

COOK

Ceiling Fans

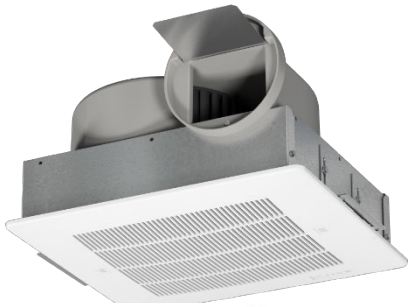

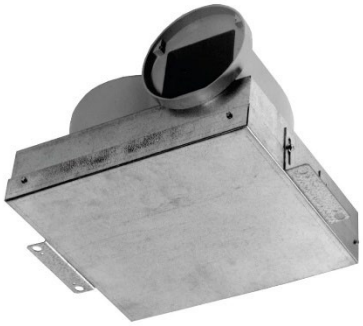

Gemini

Features:

- Direct Drive
- Gravity Backdraft Damper included
- Speed Controller Pricing on page 9
- Inline Kits available for GC146, GC148 & GC186

Model	Motor RPM	0.00”SP CFM/Sones	0.125” SP CFM/Sones	0.250”SP CFM/Sones	0.375”SP CFM/Sones	.500”SP CFM/Sones	0.625”SP CFM/Sones	0.750”SP CFM/Sones	List Price
GC146	900	114/1.2	103/1.2	90/1.3	77/1.5	64/2.0	50/2.5	36/3.0	$310.00
GC148	1075	152/2.5	142/2.5	132/2.5	120/2.5	108/3.0	94/3.0	78/3.5	$310.00
GC186	1100	231/5.5	225/5.5	218/5.5	209/5.5	199/5.0	186/5.0	170/5.0	$360.00
GC542	1600	391/5.5	377/5.5	361/5.5	340/5.5	314/5.5	285/5.0	248/4.5	$580.00
GC622	1400	501/3.5	486/3.5	461/3.0	433/3.0	392/3.0	339/3.0	-	$640.00

Model	Inline Kit
GC146	$70.00
GC148	$70.00
GC186	$70.00

Model	Speed Controller
GC146	5 amp
GC148	5 amp
GC186	5 amp
GC542	5 amp
GC622	5 amp

**Pricing on page 9*

Fan Accessories

Speed Controller

5 amp 10 amp

Features:

- Available for Direct Drive units
- Can be mounted remotely or at the unit
- Used to adjust unit to desired capacity

Control Mode	List Price
5 amp	$75.00
10 amp	$150.00

Roof Curbs

Features:

- 12” high *(Syracuse)*
- 18” high *(Rochester)*
- Rigid insulation
- Nominal 2” x 2” wood nailer

Curb O.D.	List Price 12”H	List Price 18”H
12 x 12	$140.00	$155.00
14 x 14	$175.00	N/A
16 x 16	$185.00	N/A
17 x 17	$190.00	$200.00
19 x 19	$210.00	$210.00
23 x 23	$250.00	$250.00
29 x 29	$350.00	N/A

Weather Cap

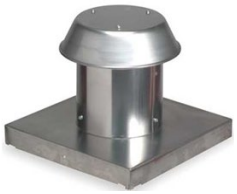

Features:

- Material: Spun Aluminum
- Birdscreen included
- Curb Mount – *Curb not included (see above for pricing)*

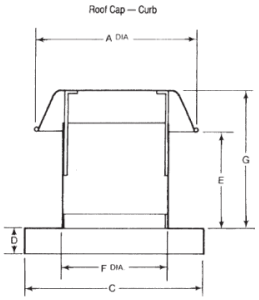

Model	A	C	D	E	F	G	Curb Size	List Price
611CM	11	15-1/2	1-7/8	7-3/4	7-3/4	10-1/8	14 x 14	$180.00
612CM	18-1/2	17-3/4	1-7/8	11-1/8	12	15-5/8	16 x 16	$240.00

Equipment Rails & Pipe Portals

Rails

Features:

- All welded steel support
- 18ga galvanized steel construction
- 12” high & 18”H
- 2” Flashing Strip
- Factory Installed Wood Nailer

Length	12”H List	18”H List
3 Feet	$220.00	$320.00
5 Feet	$290.00	$450.00

Pipe Portal

Features:

- 12 x 12 x 12”H & 18”H OD Curb – *priced separately*
- Plastic Cap, 1 or 4 Pipe Silicone Rubber Boot, Stainless Steel Clamp assembly – *priced separately*

Size	List Price
1 Pipe Cap Assembly	$200.00
4 Pipe Cap Assembly	$200.00
12 x 12 x 12”H Curb	$140.00
12 x 12 x 18”H Curb	$155.00

Wall & Roof Caps

Wall Caps

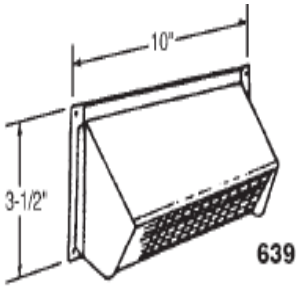

- Steel baked black enamel finish
- Spring-loaded backdraft damper and built-in alum bird screen
- For 3 ½" x 10" duct

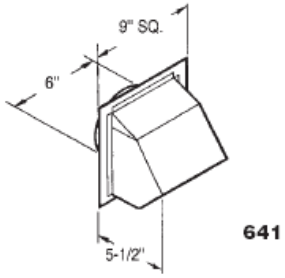

- Aluminum – natural finish
- Built-in backdraft damper
- For 6" round duct

Item	List Price
639	$43.00
641	$82.00
642	$38.00
643	$120.00

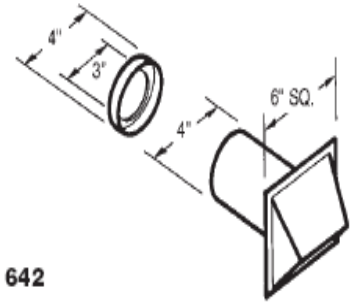

- Aluminum – natural finish
- Built-in backdraft damper
- For 4" round duct (4"-3" transition incl)

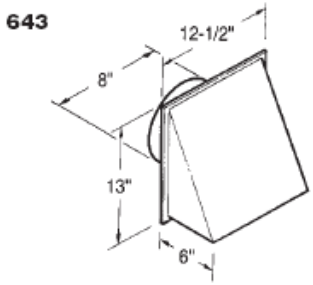

- Aluminum – natural finish
- Built-in backdraft damper
- For 8" round duct

Roof Caps

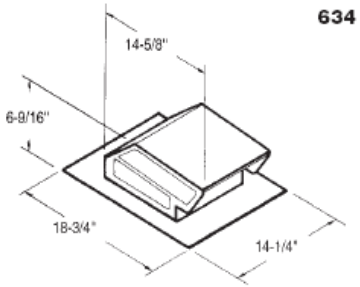

- Steel black electrically bonded epoxy finish
- Built-in backdraft damper & birdscreen
- For 10-2/4" x 10 ¾" or up to 10" round

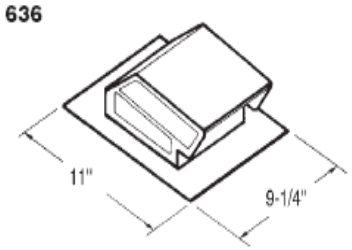

- Steel black electrically bonded epoxy finish
- Built-in backdraft damper & birdscreen
- For 3" or 4" round duct

Item	List Price
634	$63.00
636	$35.00

Nailor Industries Inc.

Dampers & Actuators

0110H Fire

Features:

- Can be mounted vertically or horizontally
- 1-1/2 hour rated
- Duct size – ¼”
- 4 ¼” deep

Size W x H	List Price	Size W x H	List Price
6 x 6	$38.00	16 x 12	$64.00
8 x 6	$38.00	16 x 16	$70.00
8 x 8	$38.00	18 x 10	$66.00
10 x 8	$42.00	18 x 12	$71.00
10 x 10	$45.00	18 x 18	$85.00
12 x 6	$42.00	20 x 8	$61.00
12 x 8	$45.00	20 x 12	$71.00
12 x 10	$45.00	20 x 20	$85.00
12 x 12	$50.00	22 x 10	$71.00
14 x 8	$54.00	24 x 10	$71.00
14 x 12	$64.00	24 x 12	$78.00
14 x 14	$71.00	24 x 16	$85.00
16 x 8	$54.00	24 x 24	$102.00

0130H Fire

Features:

- Square damper with round transition
- Can be mounted vertically or horizontally
- 1-1/2 hour rated
- Loose links available if needed

Size	List Price
6”	$62.00
8”	$70.00
10”	$75.00
12”	$81.00
14”	$120.00
16”	$120.00
18”	$140.00

Fusible Links	List Price
165°	$15.00
212°	$16.00

1020 Control

Features:

- 16ga galvanized steel construction
- Blade & jamb seals

Size W x H	List Price	Size W x H	List Price
12 x 12	$180.00	24 x 24	$320.00
16 x 16	$225.00	24 x 36	$400.00
20 x 20	$290.00	30 x 30	$380.00
24 x 10	$210.00	36 x 12	$220.00
24 x 12	$210.00	36 x 24	$340.00
24 x 16	$250.00		

1370 Backdraft

Features:

- Blades are roll formed aluminum alloy
- Polyurethane blade seals reduce backflow & noise

Size	List Price
12 x 12	$130.00
16 x 16	$155.00
24 x 24	$235.00

Belimo

Model	Type	Mounting	Max Sq Ft	Voltage	List Price
LF24	Electric	External/Internal	5-7	24V	$320.00
LF120	Electric	External/Internal	5-7	120V	$330.00
NF24	Electric	External/Internal	13-15	24V	$350.00
NF120	Electric	External/Internal	13-15	120V	$390.00
½” SHAFT QUAD	Manual				$21.00

Louvers & Brick Vents

1604D

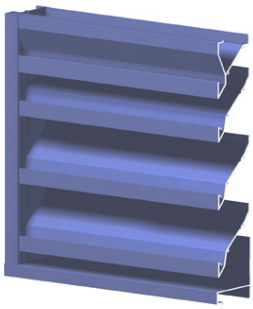

Features:

- 4” Deep Louver
- Material: Extruded Aluminum
- 45° Drainable Stationary Blade
- ½” Mesh Aluminum Birdscreen

Size	List Price
12 x 12	$170.00
16 x 16	$210.00
24 x 12	$210.00
24 x 16	$240.00
24 x 24	$290.00
30 x 30	$440.00
36 x 24	$370.00

168EX

Features:

- Brick Vent
- Material: Extruded Aluminum
- ½” Mesh Aluminum Birdscreen

Size	List Price
16½ x 7½	$135.00

Access Doors

Hinged

Features:

- Door Panel – 24ga Galvanized Steel
- Frame – 22ga Galvanized Steel
- Insulation – 1” Fiberglass

Size	List Price
6 x 6	$27.00
8 x 8	$31.00
10 x 10	$34.00
12 x 12	$38.00
14 x 14	$46.00
16 x 16	$57.00
18 x 18	$64.00
24 x 24	$90.00

Cam

VIBRO-ACOUSTICS by Swegon

Vibration Isolators

Model BA
Spring Mount

Model HNSA
Spring Hangers

Model HSF/A
Spring Flex Hangers

Floor Mounted, Spring Type BA				Hangers, Spring Type HNSA				Hangers, Spring Type HSF/A			
Type	Height	Max Load lbs.	List Price	Type	Height	Max Load lbs.	List Price	Type	Height	Max Load lbs.	List Price
BA-121	4 ½”	50	$80.00	HNSA-A3-121	8”	50	$137.00	HSF-041	4 ½”	23	$31.00
BA-122	4 ½”	80	$80.00	HNSA-A4-122	8”	80	$137.00	HSF-042	4 ½”	40	$31.00
BA-123	4 ½”	130	$80.00	HNSA-B1-123	8”	130	$137.00	HSF-043	4 ½”	65	$31.00
BA-124	4 ½”	210	$80.00	HNSA-B2-124	8”	210	$137.00	HSF-044	4 ½”	90	$31.00
BA-125	4 ½”	300	$80.00	HNSA-B3-125	8”	300	$137.00	HSF-045	4 ½”	185	$31.00
BA-126	4 ½”	370	$80.00	HNSA-BE-126	8”	370	$137.00	HSA-124	4 ½”	210	$87.00
								HAS-125	4 ½”	300	$87.00
								HAS-126	4 ½”	370	$87.00

VIBRO-ACOUSTICS by Swegon

Vibration Isolators

Model HND
Rubber-In-Shear Hangers

Model FMD
Rubber-In-Shear Mounts

Hangers, Rubber-In-Shear Type HND				Floor Mounted, Rubber-In-Shear Type FMD			
Type	Height	Max Load lbs.	List Price	Type	Height	Max Load lbs.	List Price
HND-A-1	3”	30	$21.00	FMD-A-1	1 ¼”	30	$32.00
HND-A-2	3”	40	$21.00	FMD-A-2	1 ¼”	40	$32.00
HND-A-3	3”	70	$21.00	FMD-A-3	1 ¼”	70	$32.00
HND-A-4	3”	120	$21.00	FMD-A-4	1 ¾”	115	$32.00
HND-B-1	4”	165	$21.00	FMD-B-1	1 ¾”	130	$45.00
HND-B-2	4”	235	$45.00	FMD-B-2	1 ¾”	165	$45.00
HND-B-3	4”	375	$45.00	FMD-B-3	1 ¾”	235	$45.00
HND-B-4	4”	572	$45.00	FMD-B-4	1 ¾”	375	$45.00

Shear Flex Pads

Features:

- Material: Special Rubber
- Extremely High Deflection Rate
- Alternately Raised Ribs provide effective vibration isolation in both high & low load ranges
- Max Load: 60lbs
- Load Range: 15-55 psi

Size	List Price
18” x 18” x 3/8”	$100.00

Variable Frequency Drives

Base Drives				
Voltage	HP	Model	List Price	Stock Location*
208V	2	ACH580-01-07A5-2	$1,350.00	S
208V	5	ACH580-01-017A-2	$1,650.00	S
208V	10	ACH580-01-031A-2	$2,350.00	S
480V	3	ACH580-01-04A8-4	$1,300.00	A/S/R
480V	5	ACH580-01-07A6-4	$1,500.00	A/S/R
480V	7.5	ACH580-01-012A-4	$1,700.00	A/S/R
480V	10	ACH580-01-014A-4	$1,950.00	R
480V	15	ACH580-01-023A-4	$2,500.00	A/S/R
480V	20	ACH580-01-027A-4	$3,120.00	A/S/R
480V	25	ACH580-01-034A-4	$4,000.00	R
480V	30	ACH580-01-044A-4	$4,700.00	A
480V	40	ACH580-01-052A-4	$5,650.00	A
480V	50	ACH580-01-065A-4	$7,150.00	A

ACH580 General Purpose HVAC Variable Frequency Drive. UL Type I Enclosure, Advanced Operator Keypad, 5% Input Swing Choke (Reactor), EMI/RFI Filter, and embedded N2, FLN, Modbus & BACnet included as standard.

Drives with Bypass, Circuit Breaker and Service Switch				
Voltage	HP	Model	List Price	Stock Location*
480V	3	ACH580-VCR-04A8-4+F267	$3,000.00	A/S/R
480V	5	ACH580-VCR-07A6-4+F267	$3,150.00	R
480V	7.5	ACH580-VCR-012A-4+F267	$3,350.00	A/S/R
480V	10	ACH580-VCR-014A-4+F267	$3,550.00	R
480V	15	ACH580-VCR-023A-4+F267	$4,300.00	A/S/R
480V	20	ACH580-VCR-027A-4+F267	$5,050.00	A/S/R
480V	25	ACH580-VCR-034A-4+F267	$6,000.00	R

ACH580 UH Drive with E-Clipse Bypass, UL Type I Enclosure, Main Circuit Breaker, Operator Advanced Bypass Keypad, Output & Bypass Contractors, Drive Input Service Switch, Pass Through Bypass I/O including N2, FLN, Modbus & BACnet included as standard

*Location	A: Albany	S: Syracuse	R: Rochester
	22 Computer Dr West	6412 Baird Avenue	889 Atlantic Avenue

Factory Authorized Start-up Not Included**

Warranty (w/o Factory Authorized Start-up): 1 year Factory Warranty includes parts only

****Start Up:** For an additional cost we can provide factory certified start up. Certified start up includes 2 year parts and labor warranty. Please contact your R.F. Peck representative for details